1. General Description

A: SPECIFICATION

1. SIDE

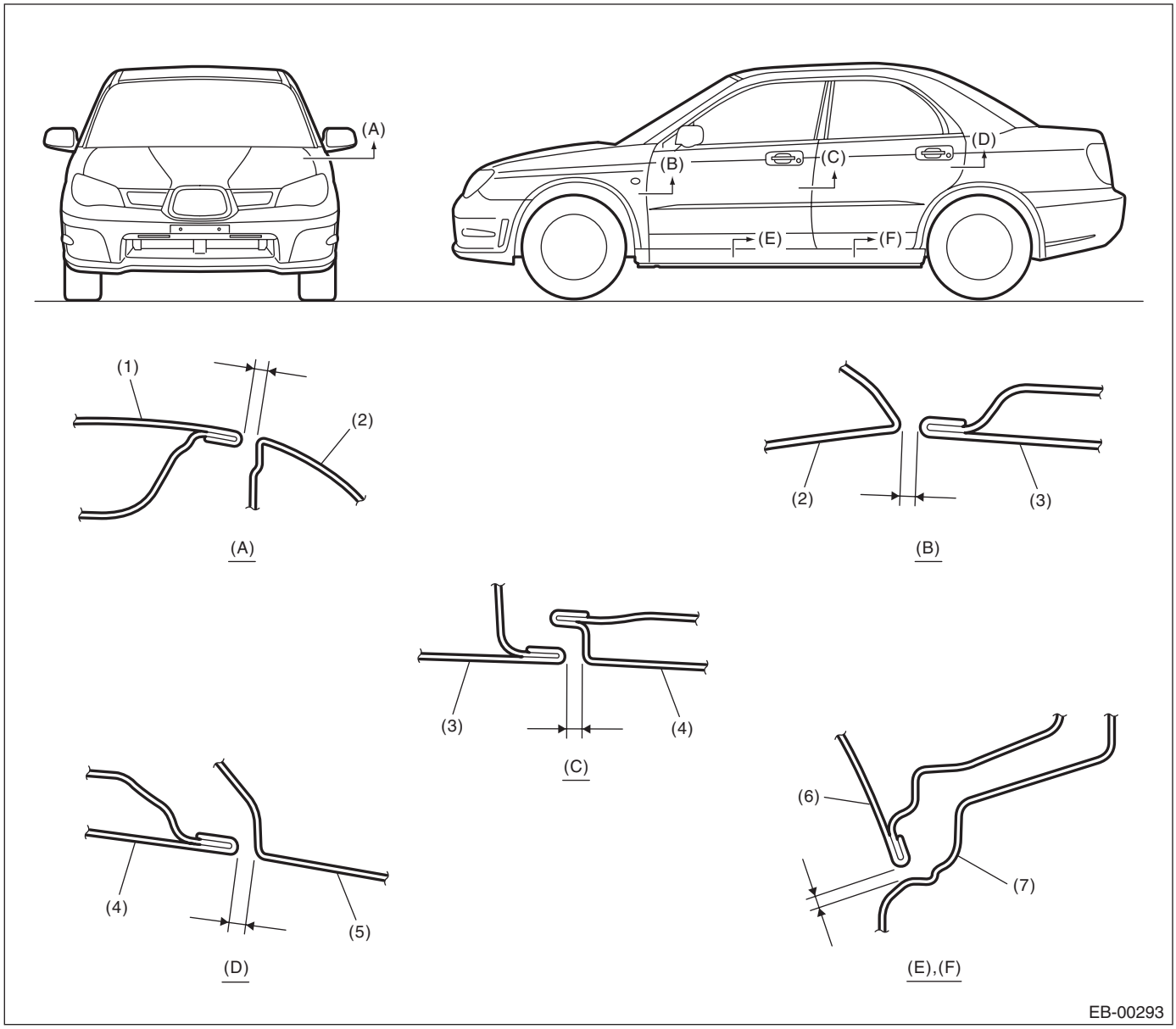

(1) Front hood panel
(2) Front fender panel
(3) Front door panel
(4) Rear door panel
(5) Rear quarter panel
(6) Door panel
(7) Side sill

Section	Part	Standard
(A)	Front hood panel to Front fender panel	3.5±1.0 mm (0.14±0.04 in)
(B)	Front fender panel to Front door panel	4.7±1.0 mm (0.19±0.04 in)
(C)	Front door panel to Rear door panel	5.1±1.0 mm (0.20±0.04 in)
(D)	Rear door panel to Rear quarter panel	4.6±1.0 mm (0.18±0.04 in)
(E), (F)	Door panel to Side sill	5.9±1.0 mm (0.23±0.04 in)

2. FRONT

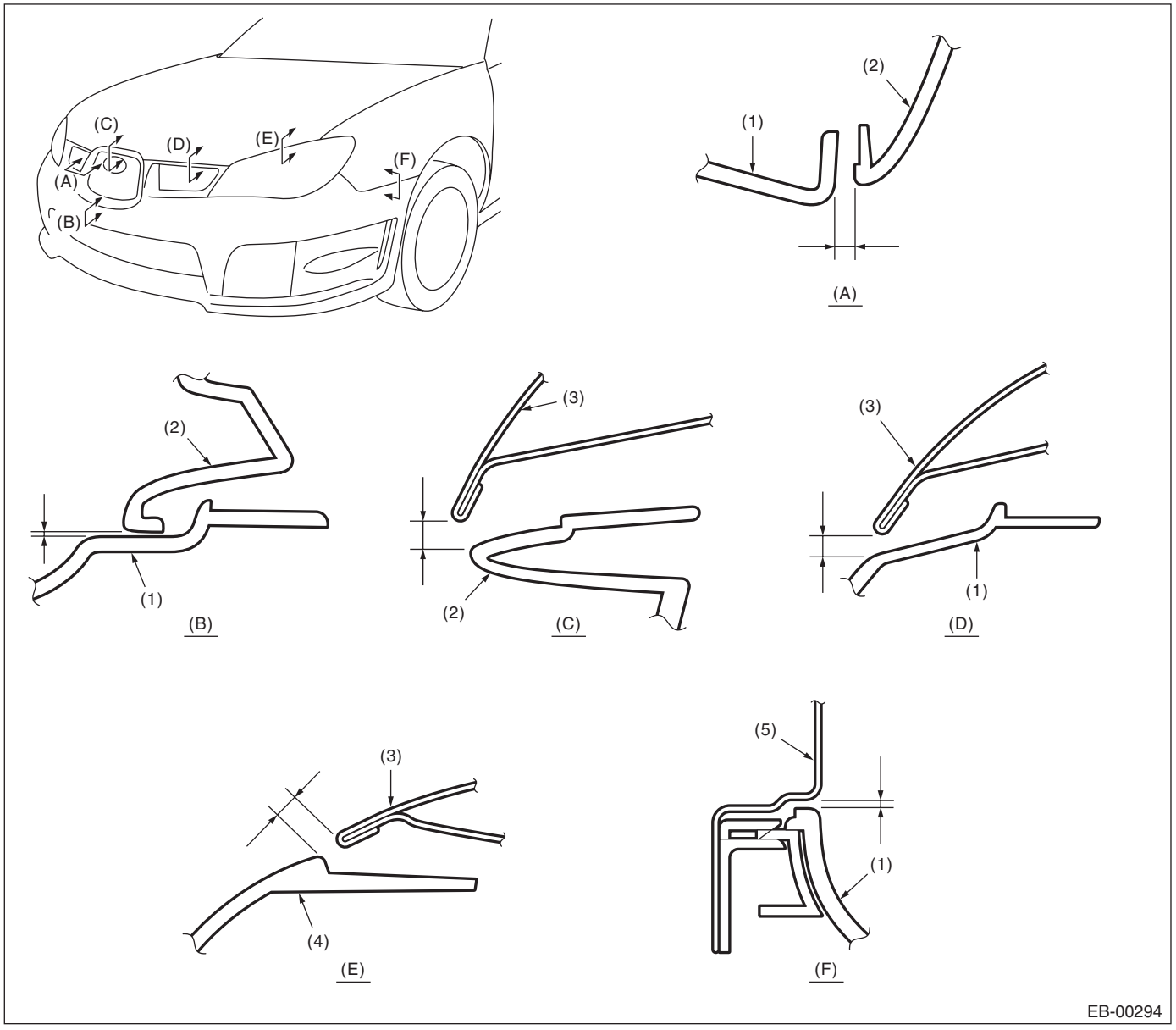

(1) Front bumper
(2) Front grille
(3) Front hood panel
(4) Headlight
(5) Front fender panel

Section	Part	Standard
(A)	Front bumper to Front grille (lateral direction)	$0.5^{+1.0}_{-0.5}$ mm ($0.02^{+0.22}_{-0.02}$ in)
(B)	Front bumper to Front grille (longitudinal direction)	0.5±0.5 mm (0.02±0.02 in)
(C)	Front hood panel to Front grille	5.5±1.0 mm (0.22±0.04 in)
(D)	Front hood panel to Front bumper	5.5±1.0 mm (0.22±0.04 in)
(E)	Front hood panel to Headlight	5.5±1.0 mm (0.22±0.04 in)
(F)	Front fender panel to Front bumper	1.0±0.7 mm (0.04±0.03 in)

3. REAR (SEDAN MODEL)

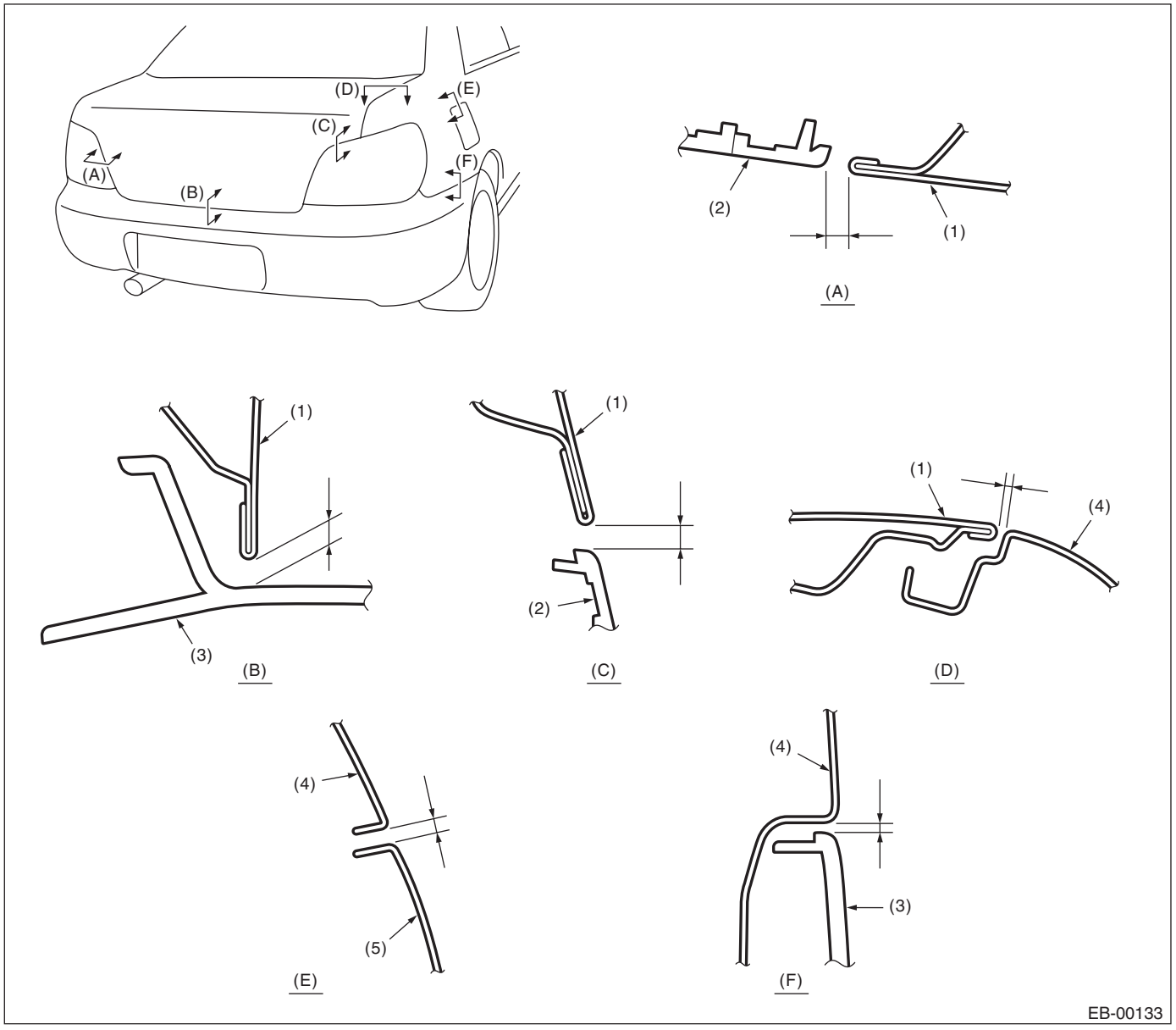

(1) Trunk lid panel
(2) Rear combination light
(3) Rear bumper
(4) Rear fender panel
(5) Fuel filler flap lid

Section	Part	Standard
(A)	Trunk lid panel to Rear combination light (lateral direction)	5.0±1.0 mm (0.20±0.04 in)
(B)	Trunk lid panel to Rear bumper	7.0±1.5 mm (0.28±0.06 in)
(C)	Trunk lid panel to Rear combination light (longitudinal direction)	7.0±1.0 mm (0.28±0.04 in)
(D)	Trunk lid panel to Rear fender panel	4.0±1.0 mm (0.16±0.04 in)
(E)	Rear fender panel to Fuel filler flap lid	3.5±0.5 mm (0.14±0.02 in)
(F)	Rear fender panel to Rear bumper	0.3 — 2.2 mm (0.01 — 0.09 in)

4. REAR (WAGON MODEL)

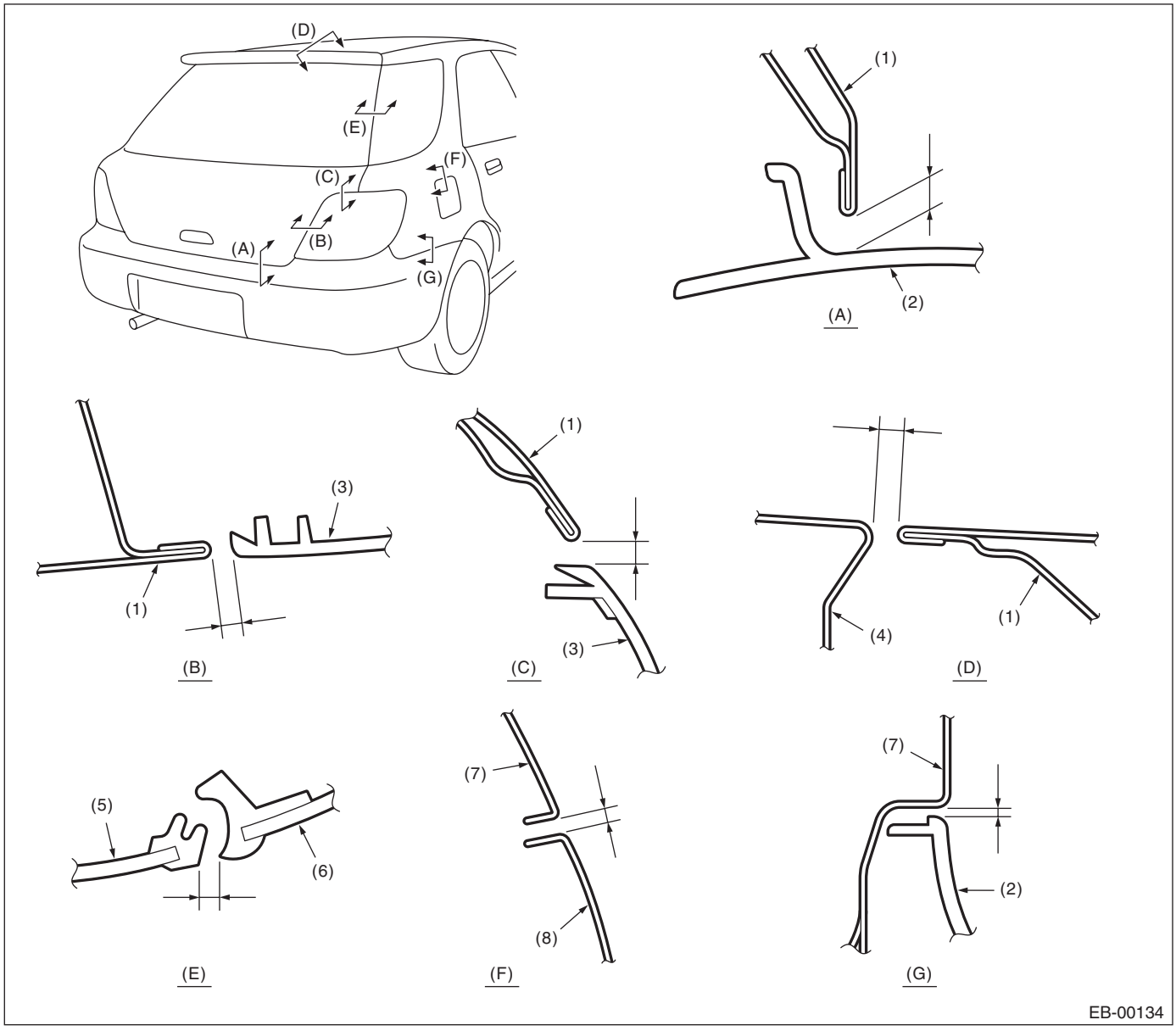

(1) Rear gate panel
(2) Rear bumper
(3) Rear combination light
(4) Roof panel
(5) Rear gate glass
(6) Rear quarter glass
(7) Rear fender panel
(8) Fuel filler flap lid

Section	Part	Standard
(A)	Rear gate panel to Rear bumper	8.3±1.5 mm (0.33±0.06 in)
(B)	Rear gate panel to Rear combination light (lateral direction)	5.0±1.0 mm (0.20±0.04 in)
(C)	Rear gate panel to Rear combination light (longitudinal direction)	6.0±1.0 mm (0.24±0.04 in)
(D)	Roof panel to Rear gate panel	6.1 — 7.6 mm (0.24 — 0.30 in)
(E)	Rear gate glass to Rear quarter glass	6.0±1.5 mm (0.24±0.06 in)
(F)	Rear fender panel to Fuel filler flap lid	3.5±0.5 mm (0.14±0.02 in)
(G)	Rear fender panel to Rear bumper	0.3 — 2.2 mm (0.01 — 0.09 in)

B: COMPONENT

1. FRONT HOOD

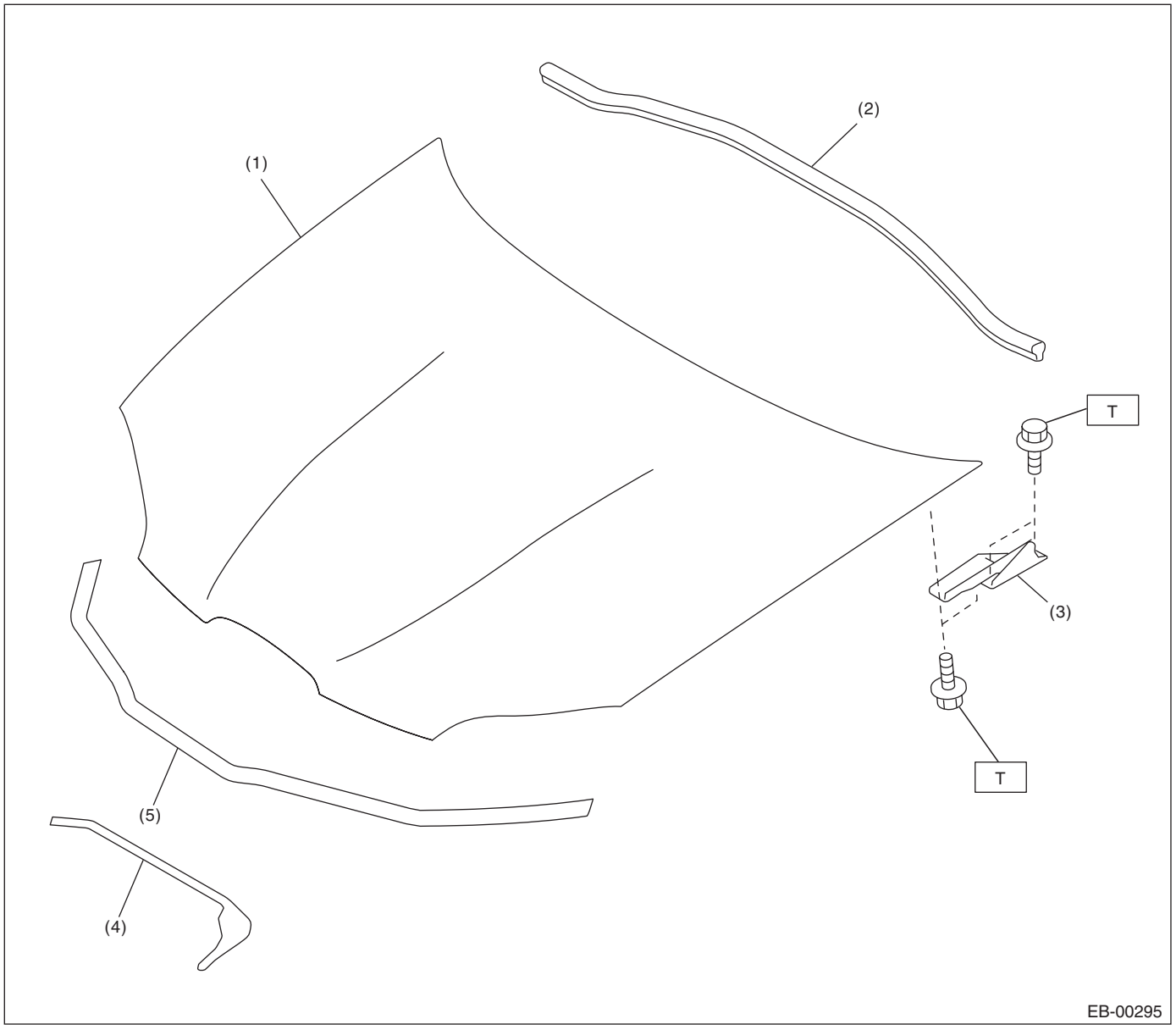

(1) Front hood
(2) Seal (front panel)
(3) Hinge
(4) Seal (intake duct)
(5) Seal (front hood)

Tightening torque:N·m (kgf-m, ft-lb)
T: 37.0 (3.6, 27.3)

2. FRONT FENDER PANEL

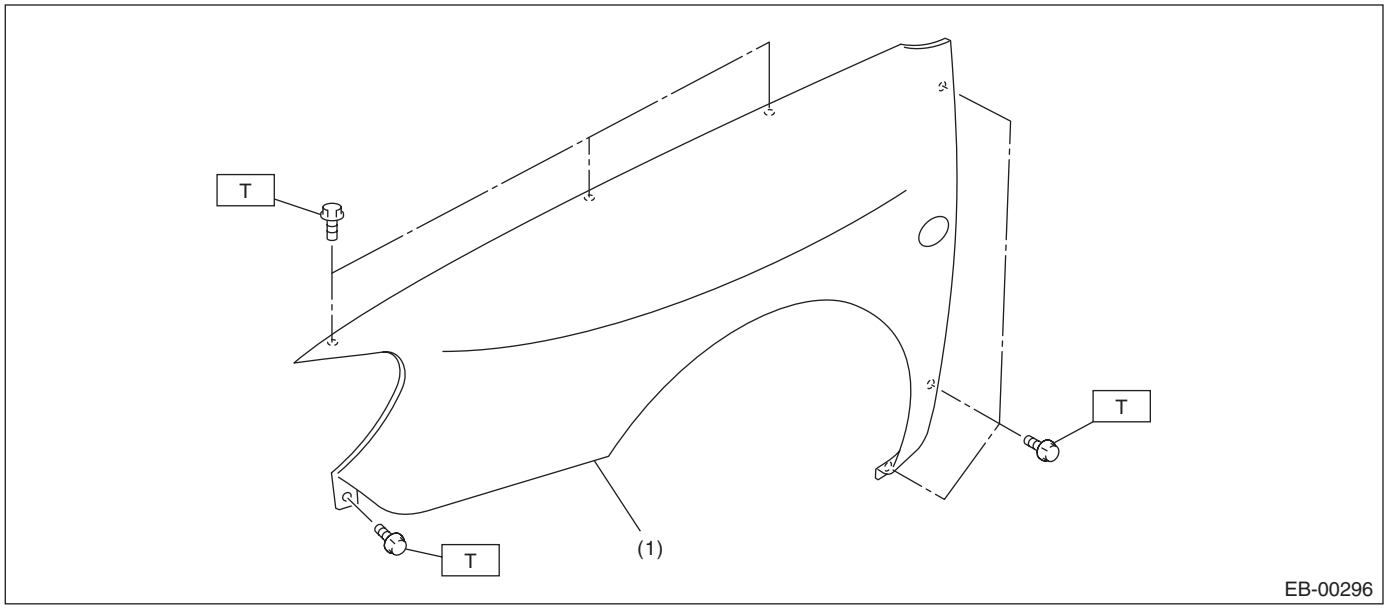

(1) Front fender panel

Tightening torque:N·m (kgf-m, ft-lb)
T: 7.5 (0.76, 5.5)

3. FRONT DOOR PANEL

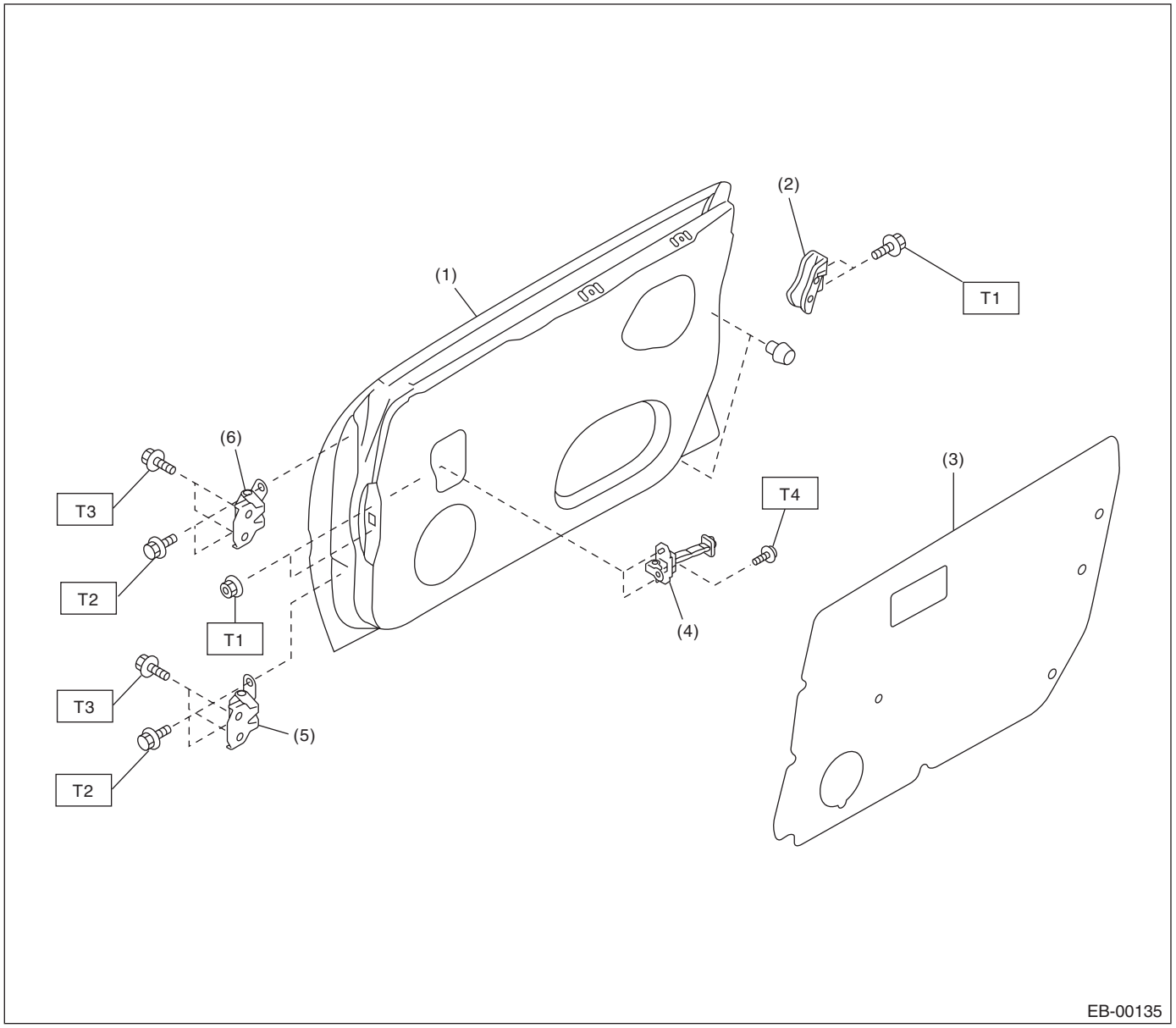

(1)	Front door panel	(6)	Upper hinge
(2)	Guide		
(3)	Sealing cover		
(4)	Checker		
(5)	Lower hinge		

Tightening torque:N·m (kgf-m, ft-lb)

T1: 7.4 (0.75, 5.5)
T2: 24.5 (2.5, 18.1)
T3: 29.4 (3.0, 21.7)
T4: 32.3 (3.3, 23.8)

4. REAR DOOR PANEL

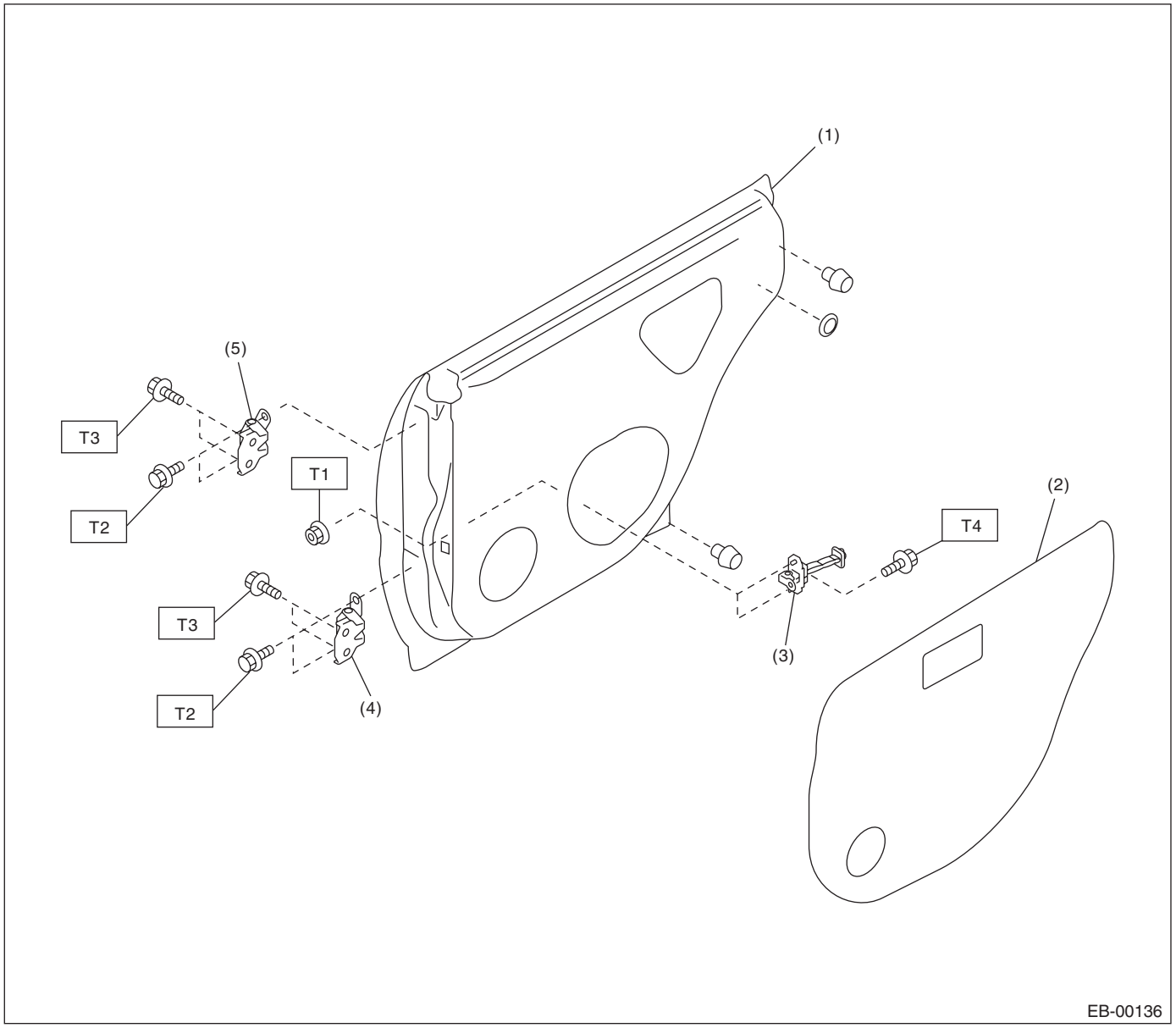

(1)	Rear door panel	(4)	Lower hinge
(2)	Sealing cover	(5)	Upper hinge
(3)	Checker		

Tightening torque:N·m (kgf-m, ft-lb)

T1: 7.4 (0.75, 5.5)
T2: 24.5 (2.5, 18.1)
T3: 29.4 (3.0, 21.7)
T4: 32.3 (3.3, 23.8)

5. TRUNK LID PANEL

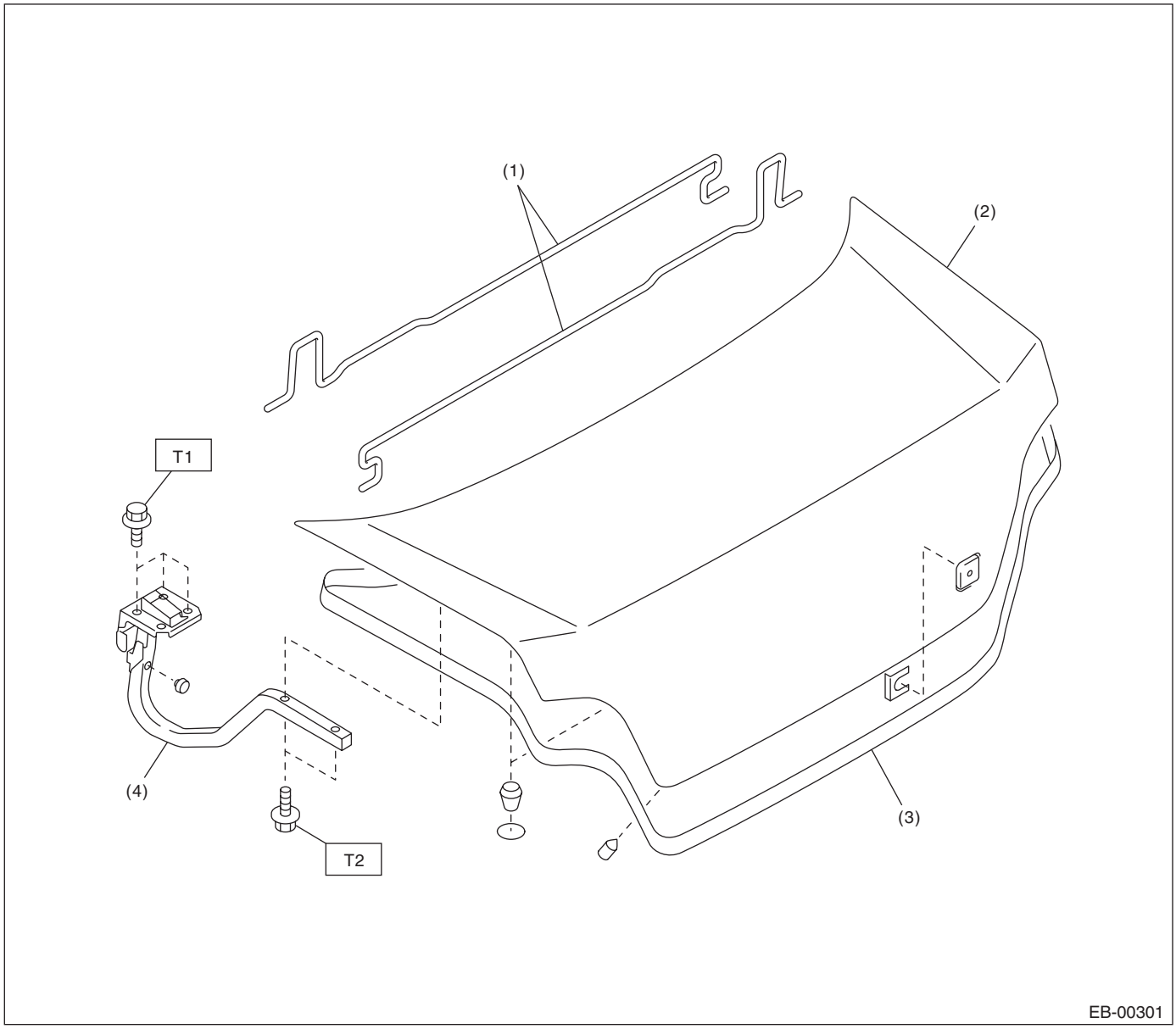

(1) Torsion bar
(2) Trunk lid panel
(3) Weather strip
(4) Hinge ASSY

Tightening torque:N·m (kgf-m, ft-lb)
T1: 7.5 (0.76, 5.5)
T2: 14 (1.43, 10.3)

6. REAR GATE PANEL

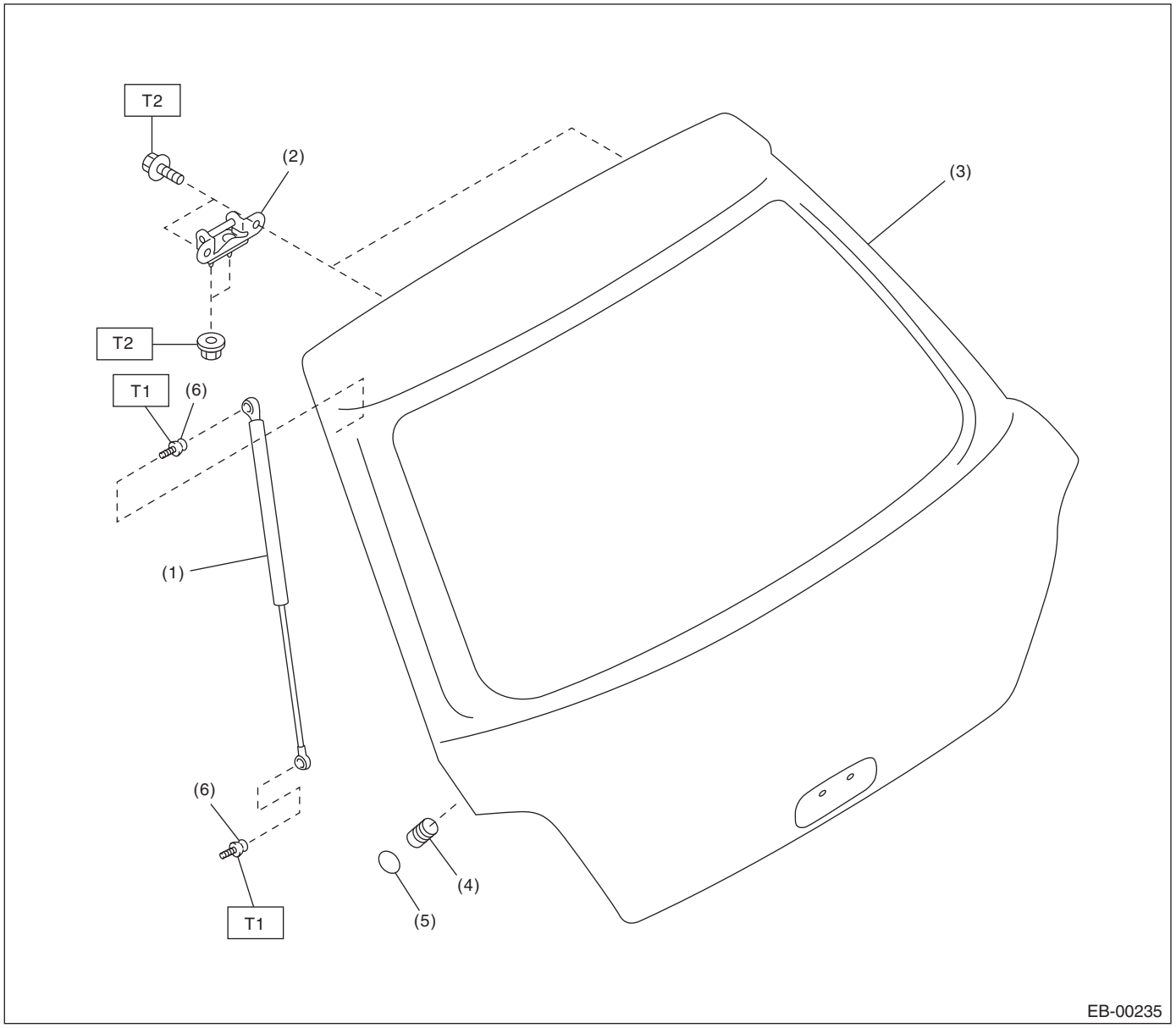

(1)	Rear gate damper stay	(4)	Stopper rubber	***Tightening torque:N·m (kgf-m, ft-lb)***
(2)	Hinge	(5)	Protector seat	***T1: 19.6 (2.0, 14.5)***
(3)	Rear gate panel	(6)	Stud bolt	***T2: 24.5 (2.5, 18.1)***

C: CAUTION

- Exterior body panels are heavy. Do not drop and damage the panels. During removal and installation, do not damage the panel painting surface.
- While removing mounting bolts, using assistance devices such as a support jack will help support the panel.
- Be careful not to lose small parts.

D: PREPARATION TOOL

1. SPECIAL TOOL

ILLUSTRATION	TOOL NUMBER	DESCRIPTION	REMARKS
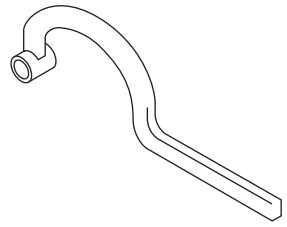 ST-925610000	925610000	WRENCH	Used for removing and installing door hinge.
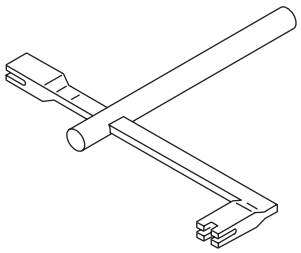 ST-927780000	927780000	REMOVER	Used for removing and installing the trunk torsion bar.

2. GENERAL TOOL

TOOL NAME	REMARKS
Support jack	Used for supporting door panel.